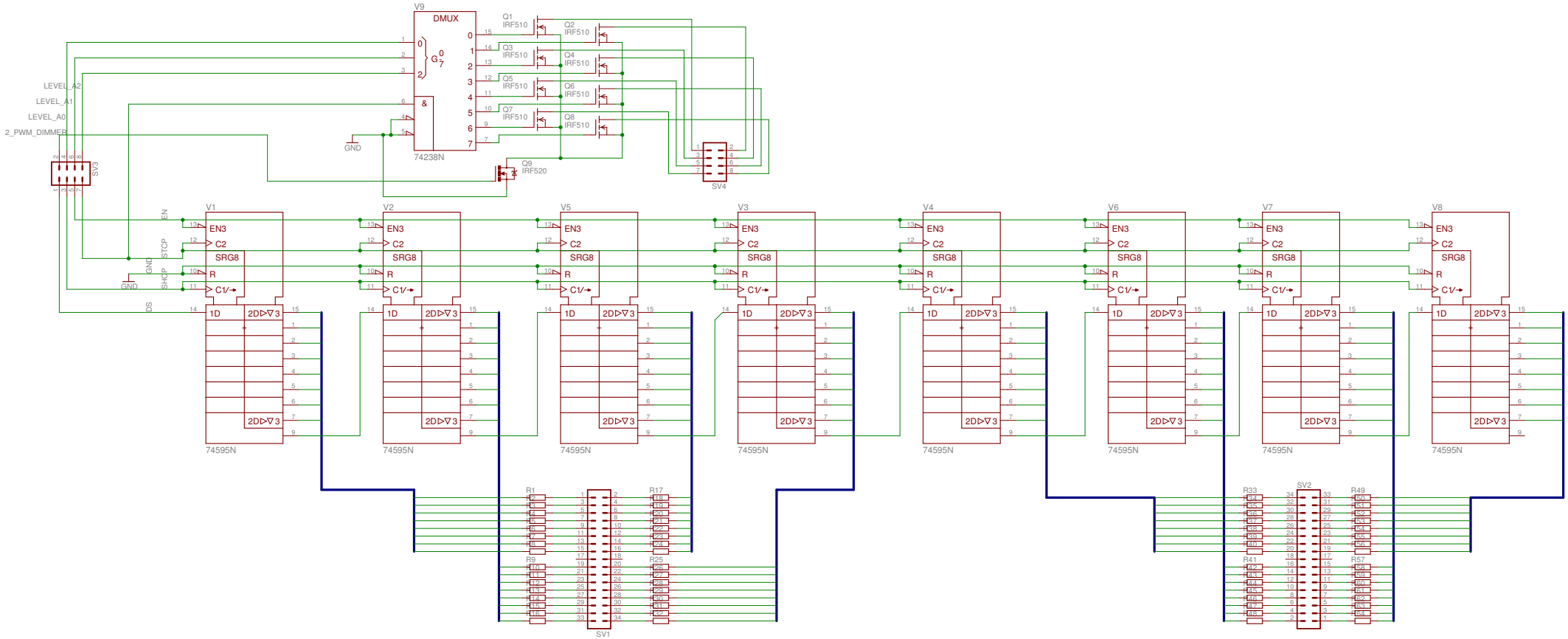

6/7/11 9:04 PM f=0.54 /home/elger/eagle/led-cube_8x8x8/led-cube_8x8x8.sch (Sheet: 1/1)